Assembly Instructions

ZARA

BEDSIDE / BCTG699O

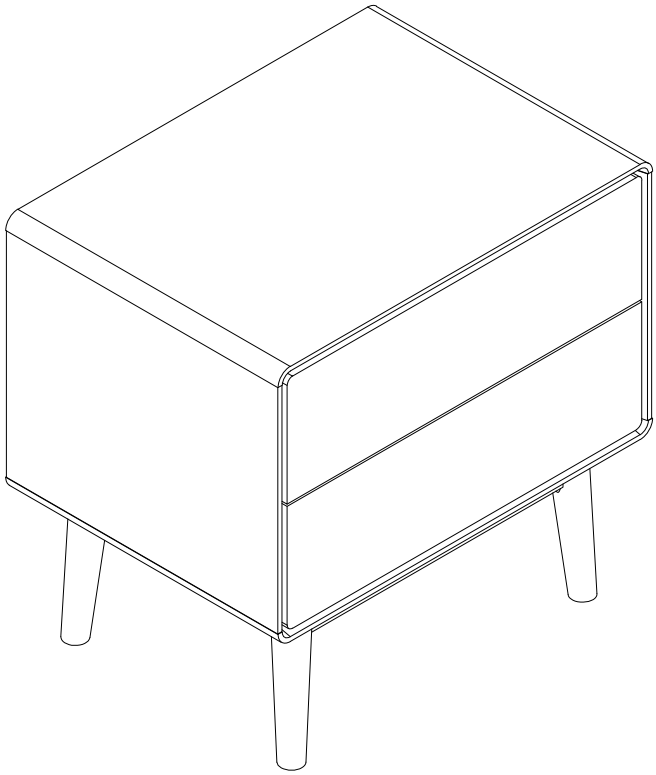

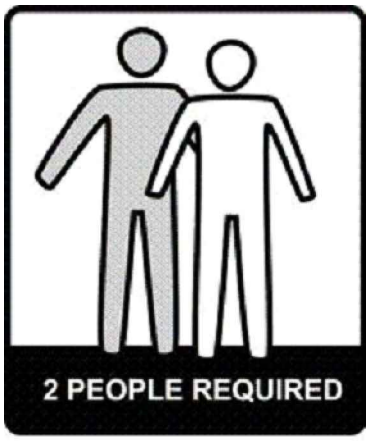

jar furniture

WARNING

FAILURE TO FOLLOW THESE BASIC STEPS CAN LEAD TO DAMAGE THAT IS NOT COVERED BY YOUR WARRANTY

1

Read Instructions carefully.
Check no parts are missing.

2

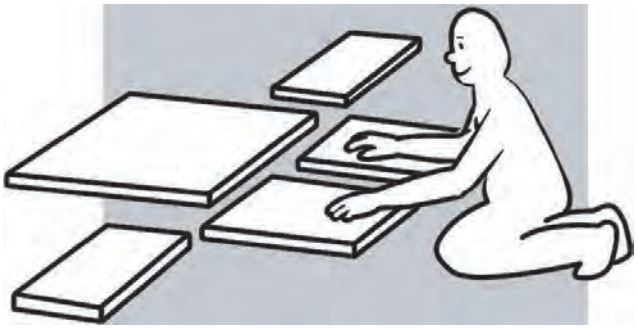

Lay out all of the components on a soft surface as if you were preparing to do a jigsaw puzzle.

3

Carefully identify each component, especially those that are similar. The most common mistake is getting things back to front.

4

Separate and identify each component from the hardware pack and rest each one in its proper location before fastening.

5

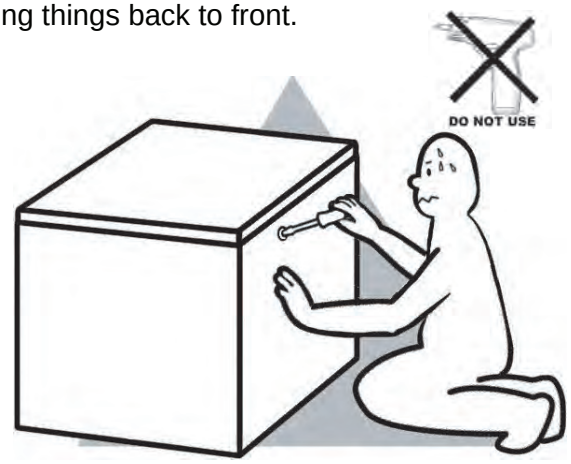

DO NOT fully tighten screws（leave slightly loose).When the item is fully assembled tighten the screws - but do not over tighten.

6

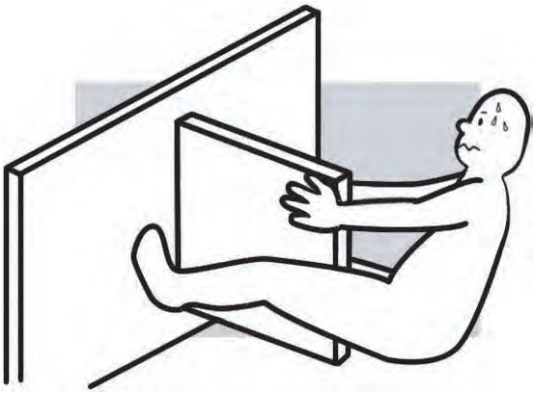

If glue is required DO NOT set until you are certain that the parts belong together.

What you Need

To Assemble the Body

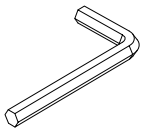

1xAllen key
(provided)

(Tools not provided)
Flat BladeScrewdriver
Phillips Head Screwdriver
Mallet

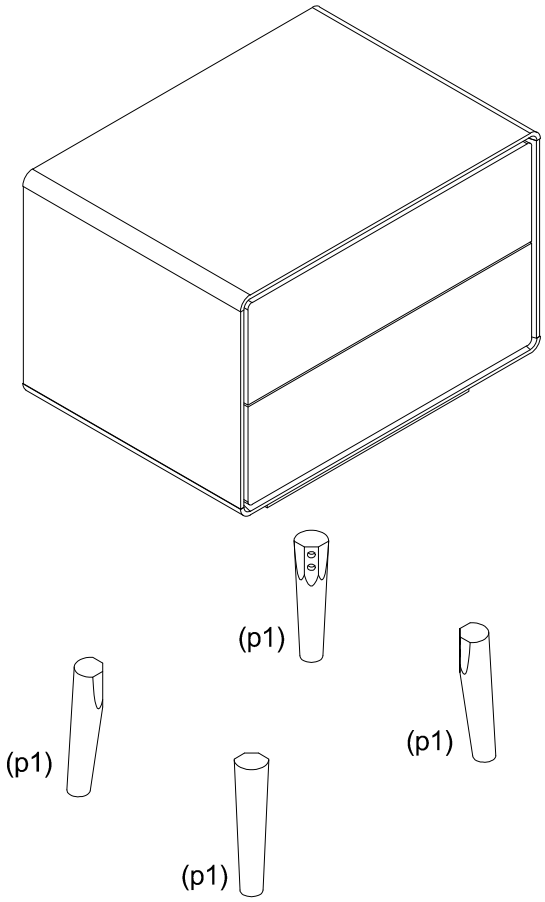

8 x
Allen Bolts
(H1)

8 x Washers
(H2)

8 x Washers
(H3)

1 x Allen key
(H4)

Please make sure you have all these parts before you start.

Step 1

You Will need:	
1 x Allen key (H4)	
8 x Allen Bolts (H1)	
8 x Washers (H2)	
8 x Washers (H3)	

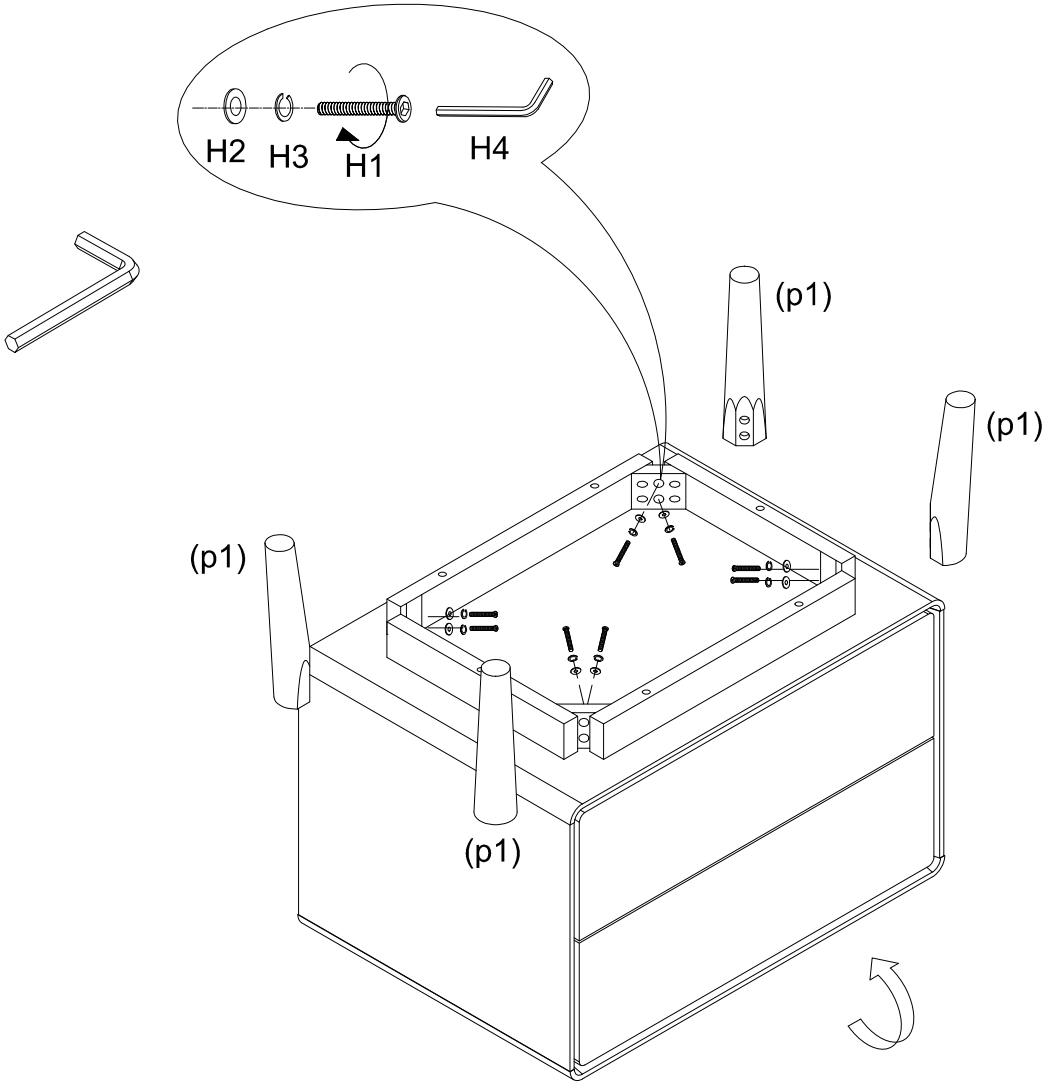

Step 2

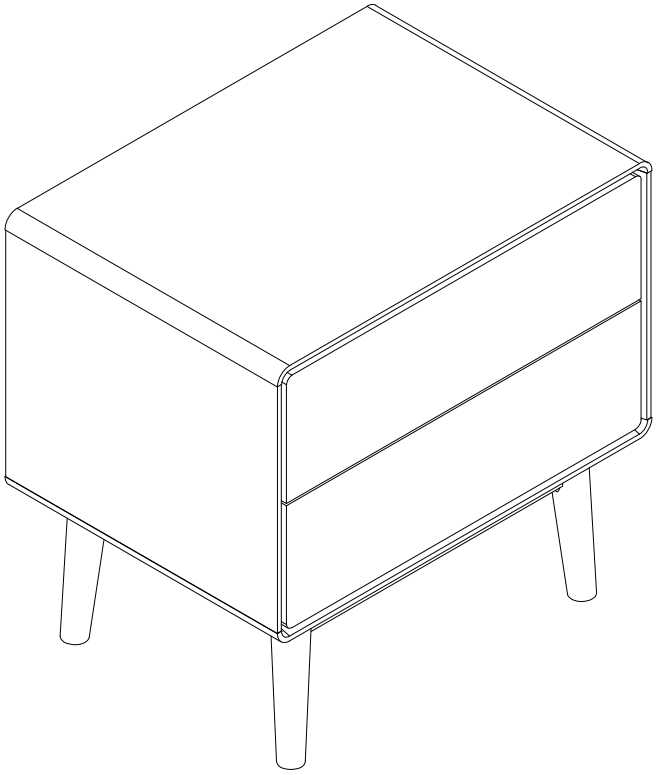

The job is complete!

In the interest of our environment
Please dispose of all packaging thoughfully